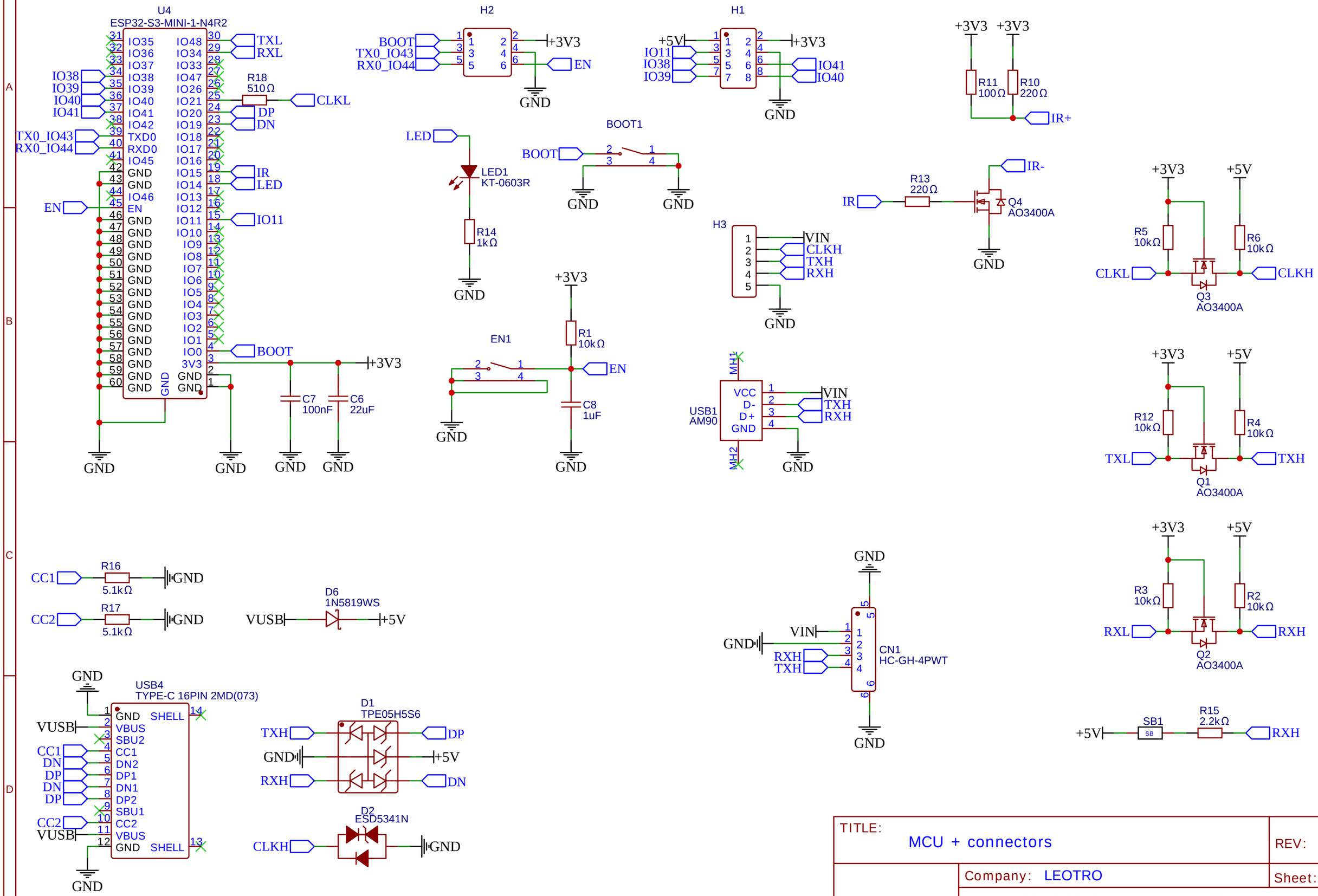


| | | |
|---|---|---|
| TITLE: MCU + connectors | | REV: 1.4 |
| | Company: LEOTRO | Sheet: 1/2 |
| | Date: 2024-04-12 Drawn By: Marc | |

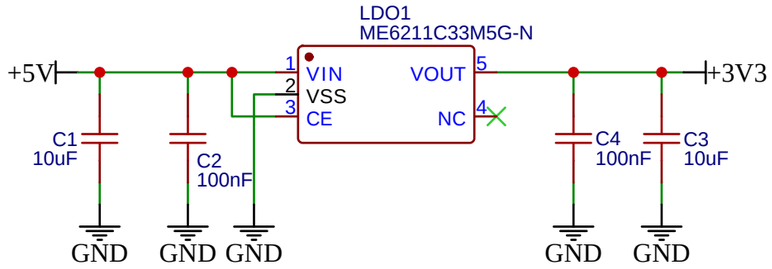


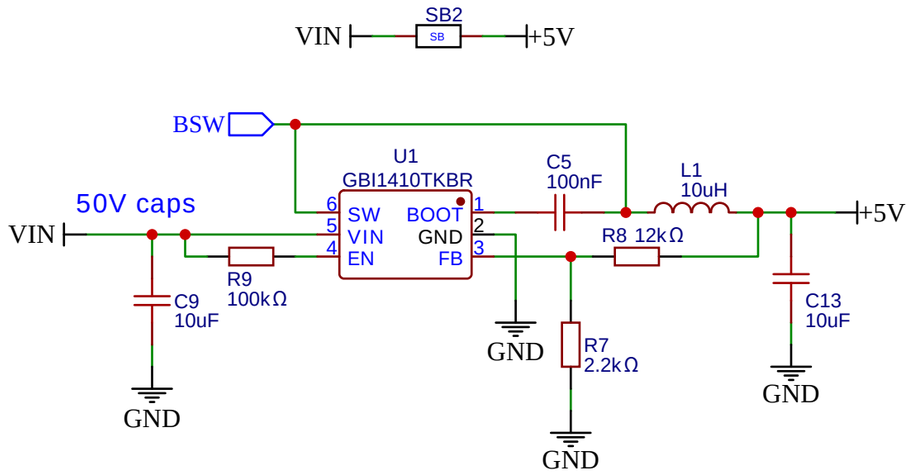


| | | |
|---|---|---|
| TITLE: Power | | REV: 1.4 |
| | Company: LEOTRO | Sheet: 2/2 |
| | Date: 2024-04-12 Drawn By: Marc | |