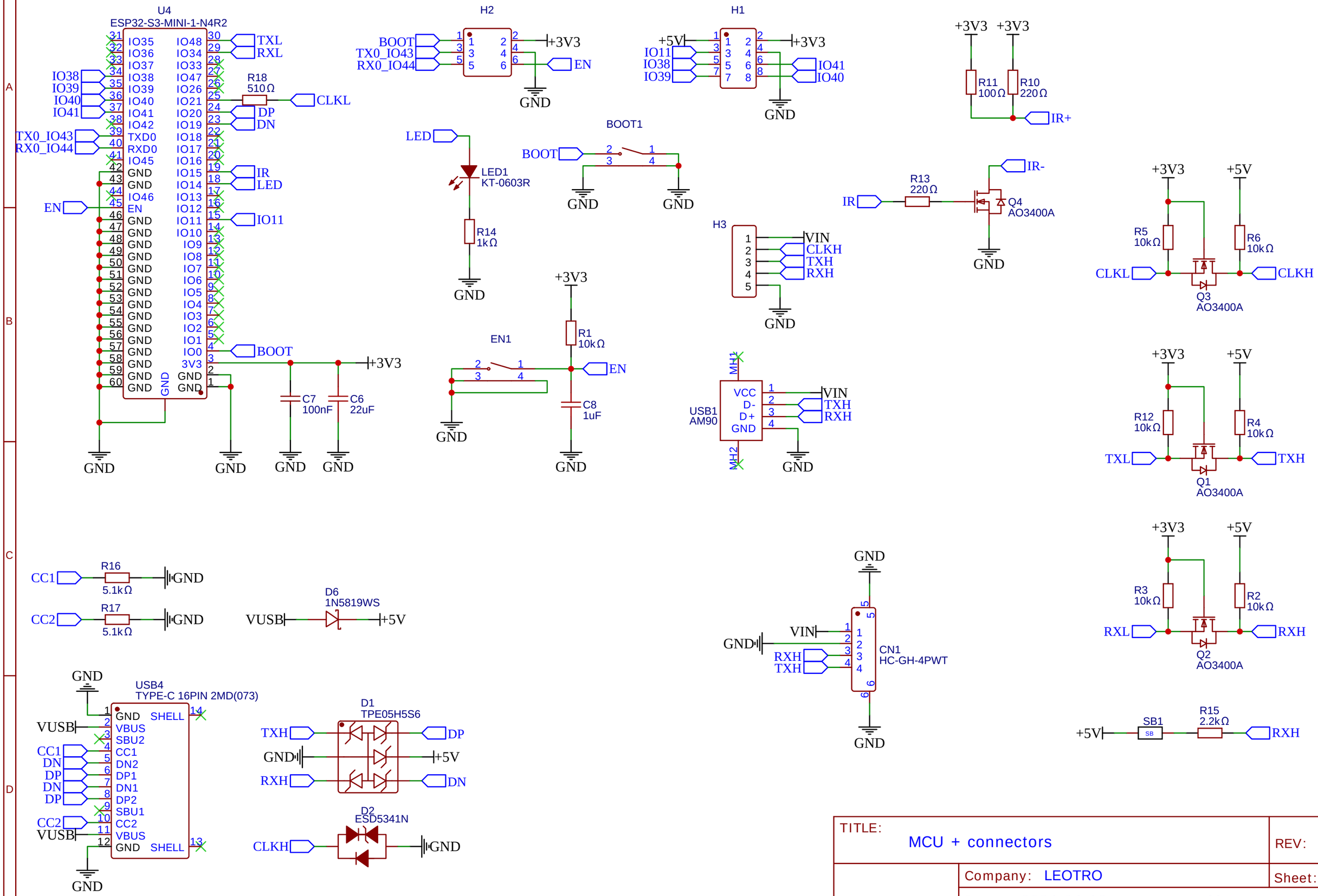

TITLE: MCU + connectors		REV: 1.3
	Company: LEOTRO	Sheet: 1/2
	Date: 2024-04-12 Drawn By: Marc	

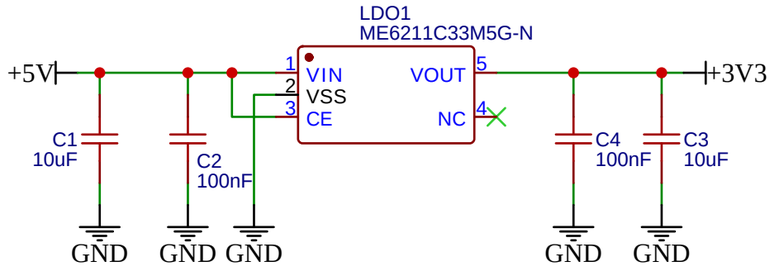

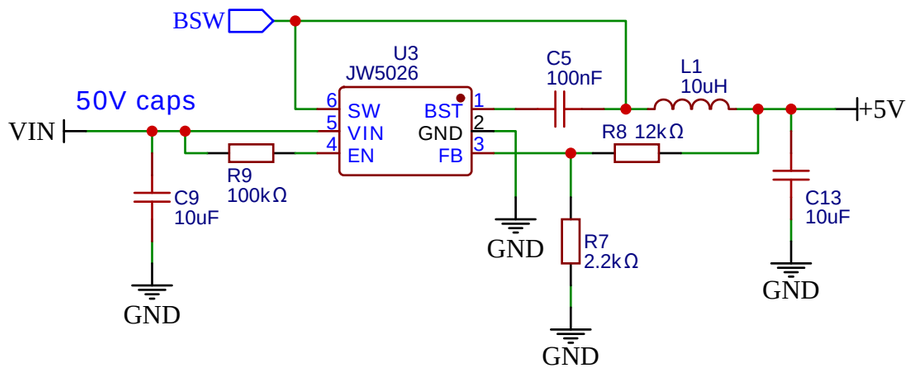

TITLE: Power		REV: 1.3
	Company: LEOTRO	Sheet: 2/2
	Date: 2024-04-12 Drawn By: Marc	